3-piece Ball Valves

BH Series

2-way Valves

Features

◎ Working pressure up to: 3000 psig (207 bar)
◎ Working temperatures: -20°F to 450°F (-28°C to 232°C)
◎ End connections:
1/8 to 2 thread
1/8" to 2" pipe butt or socket weld
1/2" to 2" and 12 mm to 50 mm tube butt or socket weld
1/2" to 2" and 12 mm to 38 mm tube fitting
◎ 3-piece precision cast body construction
◎ Body materials: CF8M (316), , CF8 (304)
◎ Seat materials: PTFE, RPTFE and PEEK
◎ Packing materials: RPTFE, Graphite
◎ Orifice sizes: 0.19" (4.8 mm) to 1.5" (38.1 mm)
◎ Pneumatic and electric actuator available
◎ Leak-tight performance testing with nitrogen or compressed air for every valve at the maximum working pressure to meet the requirement of no visible leak

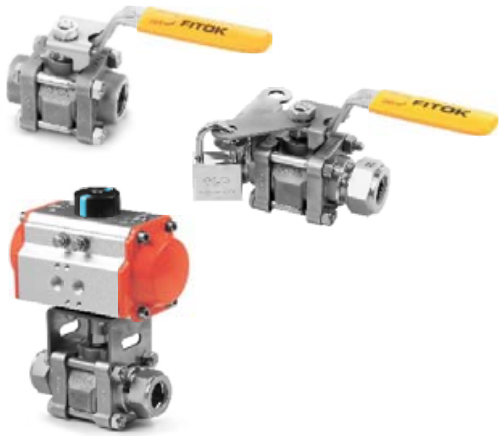

Pressure vs. Temperature

Orifice Size: 0.19"&0.28"&0.41"&0.52"&0.88"

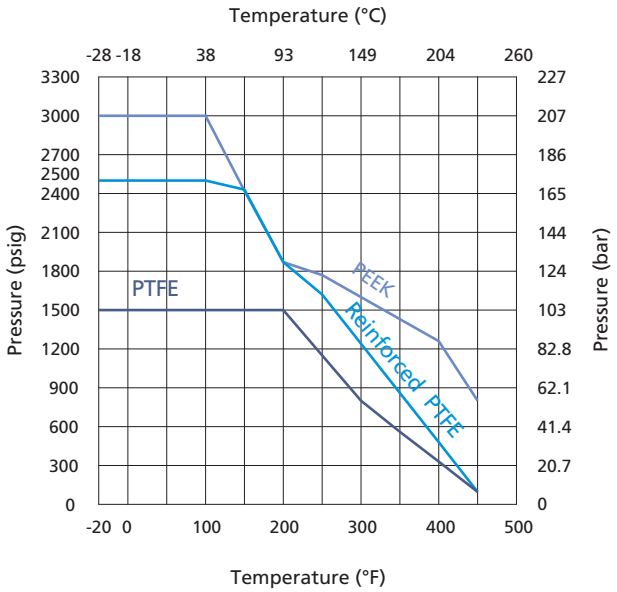

Orifice Size: 1.13"&1.25"&1.50"

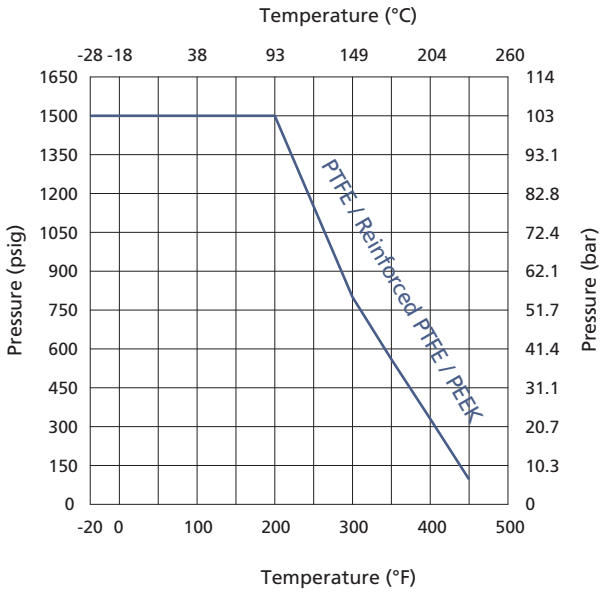

Note: The temperature and pressure rating are based on valves of standard materials.

3-way Valves

Features

- Working pressure up to: 1000 psig (69.0 bar)
- Working temperature: -20°F to 450°F (-28°C to 232°C)
- End connections:
  1/4 to 2 thread
  1/4" to 2" and 12 mm to 38 mm tube fitting
- One-piece center body without welding
- 180° actuation
- Inlet and outlet for 3-way valve: connection 1 as inlet, connection 2 and connection 3 as outlet
- Leak-tight performance testing with nitrogen or compressed air for every valve at the maximum working pressure to meet the requirement of no visible leak

Pressure vs. Temperature

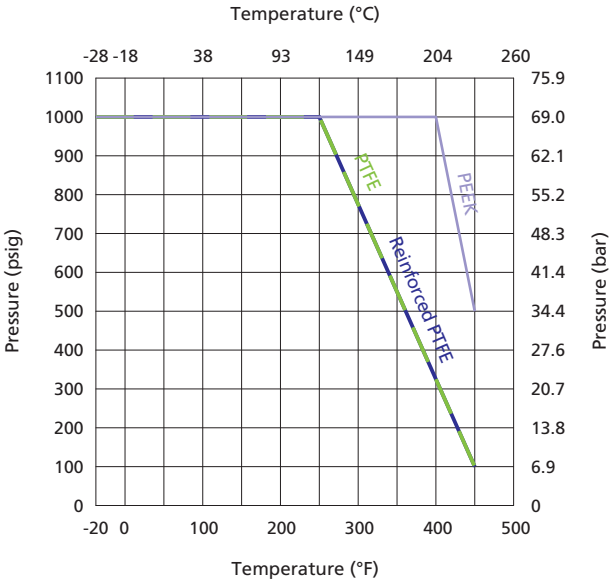

Note: The temperature and pressure rating are based on valves of standard materials.

Standard Materials of Construction

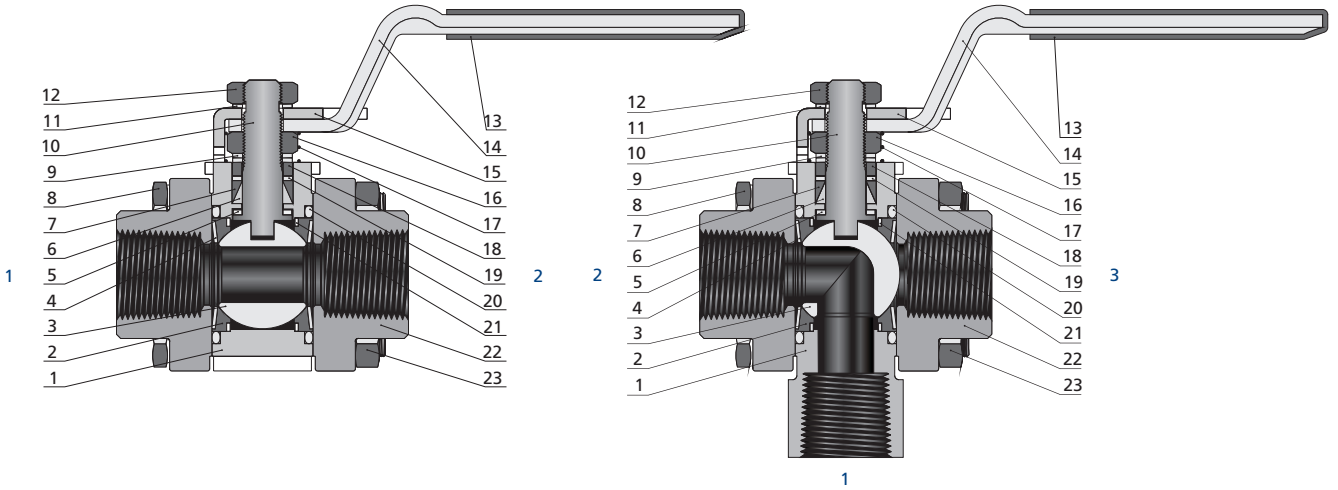

Item	Component	Material Grade/ASME Specification	
1	*Body*	*CF8M/A351*	*CF8/A351*
2	*Seat*	*PTFE or Reinforced PTFE or PEEK*	
3	*Ball*	*316 SS/A479*	
4	*Coned-disc Spring*	*Strain-hardened 316 SS/A240*	
5	*Stem Bearing*	*PEEK*	
6	*Lower Packing*	*Reinforced PTFE*	
7	*Upper Packing*	*Reinforced PTFE*	
8	Body Bolt	Gr. B8M/A193	
9	Stem Spring	Strain-hardened 316 SS/A240	
10	*Stem*	*316 SS/A479*	
11	Stem Spring	Strain-hardened 316 SS/A240	
12	Stem Nut	Gr. 8M/A194	
13	Handle Sleeve	Vinyl	
14	Handle	304 SS/A240	
15	Stop Plate	304 SS/A240	
16	Stem Nut	Gr. 8M/A194	
17	Grounding Spring	302 SS/A313	
18	Gland	PTFE-coated 316 SS/A479	
19	*Packing Support*	*PEEK*	
20	*Flange Seal*	*PTFE/D1710*	
21	*Support Ring*	*316 SS/A240*	
22	*End Connection*	*CF8M/A351*	*CF8/A351*
23	Body Nut	Gr.8M/A194	
	Lubricants	*Silicone-based and PTTE-based*	

Note: Wetted components are listed in italic.
Other materials are available upon request.

Dimensions

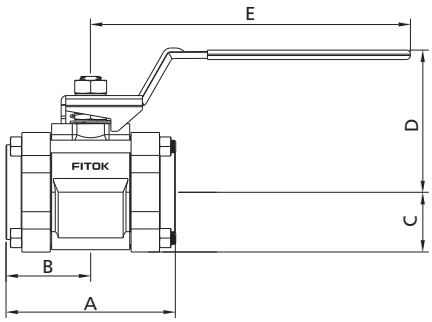

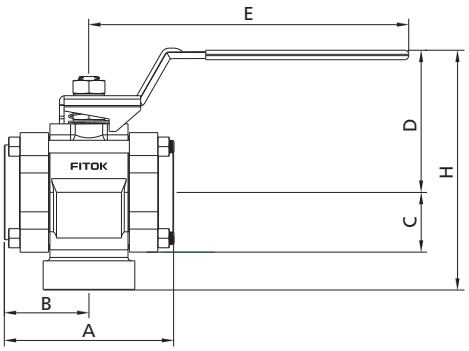

Basic Ordering Number		Connection Type and Size		Orifice in. (mm)	Cv	Dimension, in. (mm)					
Straight	3-way	Connection 1	Connection 2/3			A	B	C	D	E	H
BH□□-FL4-05	BH□□-FL4-05-3	1/4" FITOK	1/4" FITOK	0.19 (4.8)	1.2	3.17 (80.5)	1.59 (40.4)	0.68 (17.3)	1.66 (42.2)	2.37 (60.2)	3.35 (85.1)
BH□□-ML6-05	BH□□-ML6-05-3	6 mm FITOK	6 mm FITOK								
BH□□-ML8-05	BH□□-ML8-05-3	8 mm FITOK	8 mm FITOK								
BH□□-TS4-05	——	1/4" TS	1/4" TS			2.16 (54.9)	1.08 (27.4)				——
BH□□-MTS6-05	——	6 mm MTS	6 mm MTS								
BH□□-PB4-05	——	1/4 PB, Schedule Number: 80	1/4 PB, Schedule Number: 80			2.08 (52.8)	1.04 (26.4)				
BH□□-FNS2-07	BH□□-FNS2-07-3	1/8 Female NPT	1/8 Female NPT	0.28 (7.1)	3.8	2.16 (54.9)	1.08 (27.4)	0.68 (17.3)	1.66 (42.2)	2.37 (60.2)	3.12 (79.2)
BH□□-FRT2-07	BH□□-FRT2-07-3	1/8 Female BSPT	1/8 Female BSPT								
BH□□-FRP2-07	BH□□-FRP2-07-3	1/8 Female BSPP	1/8 Female BSPP								
BH□□-FNS4-07	BH□□-FNS4-07-3	1/4 Female NPT	1/4 Female NPT								
BH□□-FRT4-07	BH□□-FRT4-07-3	1/4 Female BSPT	1/4 Female BSPT								
BH□□-FRP4-07	BH□□-FRP4-07-3	1/4 Female BSPP	1/4 Female BSPP								
BH□□-FL6-07	BH□□-FL6-07-3	3/8" FITOK	3/8" FITOK			3.17 (80.5)	1.59 (40.4)				4.37 (111)
BH□□-ML10-07	BH□□-ML10-07-3	10 mm FITOK	10 mm FITOK			3.20 (81.3)	1.60 (40.6)				
BH□□-TS6-07	——	3/8" TS	3/8" TS			2.16 (54.9)	1.08 (27.4)				——
BH□□-PB6-07	——	3/8 PB, Schedule Number: 80	3/8 PB, Schedule Number: 80			2.08 (52.8)	1.04 (26.4)				
BH□□-FL8-10	BH□□-FL8-10-3	1/2" FITOK	1/2" FITOK	0.41 (10.3)	7.5	4.04 (103)	2.02 (51.3)	0.89 (22.6)	2.35 (59.7)	4.50 (114)	4.48 (114)
BH□□-ML12-10	BH□□-ML12-10-3	12 mm FITOK	12 mm FITOK	0.38 (9.5)							
BH□□-TS8-10	——	1/2" TS	1/2" TS	0.41 (10.4)		2.70 (68.6)	1.34 (34)				——
BH□□-FNS6-13	BH□□-FNS6-13-3	3/8 Female NPT	3/8 Female NPT	0.52 (13.1)	12	2.70 (68.6)	1.35 (34.3)	0.89 (22.6)	2.35 (59.7)	4.50 (114)	4.19 (106)
BH□□-FRT6-13	BH□□-FRT6-13-3	3/8 Female BSPT	3/8 Female BSPT								
BH□□-FRP6-13	BH□□-FRP6-13-3	3/8 Female BSPP	3/8 Female BSPP								
BH□□-FNS8-13	BH□□-FNS8-13-3	1/2 Female NPT	1/2 Female NPT								
BH□□-FRT8-13	BH□□-FRT8-13-3	1/2 Female BSPT	1/2 Female BSPT								
BH□□-FRP8-13	BH□□-FRP8-13-3	1/2 Female BSPP	1/2 Female BSPP								
BH□□-FL12-13	BH□□-FL12-13-3	3/4" FITOK	3/4" FITOK		13.6	4.04 (103)	2.02 (51.3)				114
BH□□-ML16-13	BH□□-ML16-13-3	16 mm FITOK	16 mm FITOK								
BH□□-ML18-13	BH□□-ML18-13-3	18 mm FITOK	18 mm FITOK								
BH□□-TS12-13	——	3/4" TS	3/4" TS			2.70 (68.6)	1.34 (34)				——
BH□□-PS8-13	——	1/2 PS	1/2 PS		15						
BH□□-PB8-13	——	1/2 PB, Schedule Number: 80	1/2 PB, Schedule Number: 80			2.69 (68.3)	1.34 (34)				

Basic Ordering Number		Connection Type and Size		Orifice in.(mm)	Cv	Dimension, in. (mm)					
Straight	3-way	Connection 1	Connection 2/3			A	B	C	D	E	H
BH□□-PB12-13	—	3/4 PB, Schedule Number: 80	3/4 PB, Schedule Number: 80	0.52 (13.1)	13.6	2.69 (68.3)	1.34 (34)	0.89 (22.6)	2.35 (59.7)	4.50 (114)	—
BH□□-FNS12-22	BH□□-FNS12-22-3	3/4 Female NPT	3/4 Female NPT	0.88 (22.2)	31	3.59 (91.2)	1.8 (45.7)	1.25 (31.8)	2.94 (74.7)	6.00 (152)	5.45 (138)
BH□□-FRT12-22	BH□□-FRT12-22-3	3/4 Female BSPT	3/4 Female BSPT								
BH□□-FRP12-22	BH□□-FRP12-22-3	3/4 Female BSPP	3/4 Female BSPP								
BH□□-FNS16-22	BH□□-FNS16-22-3	1 Female NPT	1 Female NPT		38						
BH□□-FRT16-22	BH□□-FRT16-22-3	1 Female BSPT	1 Female BSPT			4.45 (113)	2.23 (56.6)				
BH□□-FRP16-22	BH□□-FRP16-22-3	1 Female BSPP	1 Female BSPP								
BH□□-FL16-22	BH□□-FL16-22-3	1" FITOK	1" FITOK		40	5.36 (136)	2.68 (68)				5.91 (150)
BH□□-FL20-22	BH□□-FL20-22-3	1 1/4" FITOK	1 1/4" FITOK			6.34 (161)	3.17 (80.5)				
BH□□-ML25-22	BH□□-ML25-22-3	25 mm FITOK	25 mm FITOK		40	5.36 (136)	2.68 (68)				
BH□□-ML28-22	BH□□-ML28-22-3	28 mm FITOK	28 mm FITOK			6.14 (156)	3.07 (78)				
BH□□-TS16-22	—	1" TS	1" TS			3.59 (91.2)	1.80 (45.7)				—
BH□□-MTS25-22	—	25 mm MTS	25 mm MTS		38	3.59 (91.2)	1.80 (45.7)				
BH□□-PS12-22	—	3/4 PS	3/4 PS		36						
BH□□-PS16-22	—	1 PS	1 PS		42						
BH□□-PB12-22	—	3/4 PB, Schedule Number: 80	3/4 PB, Schedule Number: 80		36			1.25 (31.8)			
BH□□-PB16-22	—	1 PB Schedule Number: 80	1 PB Schedule Number: 80		40	3.46 (87.9)	1.73 (43.9)				
BH□□-TS20-29	BH□□-TS20-29-3	1 1/4" TS	1 1/4" TS	1.13 (28.6)	80	4.39 (112)	2.19 (55.6)	1.53 (38.9)	4.03 (102)	9.14 (232)	—
BH□□-PB20-29	BH□□-PB20-29-3	1 1/4 PB, Schedule Number: 80	1 1/4 PB, Schedule Number: 80			4.57 (116)	2.28 (57.9)				
BH□□-FNS20-32	BH□□-FNS20-32-3	1 1/4 Female NPT	1 1/4 Female NPT	1.25 (31.8)	100	4.39 (112)	2.19 (55.6)	1.53 (38.9)	4.03 (102)	9.14 (232)	6.86 (174)
BH□□-FNS24-32	BH□□-FNS24-32-3	1 1/2 Female NPT	1 1/2 Female NPT								
BH□□-TS24-32	—	1 1/2" TS	1 1/2" TS								—
BH□□-PS20-32	—	1 1/4 PS	1 1/4 PS		90	4.51 (115)	2.25 (57.2)				
BH□□-PS24-32	—	1 1/2 PS	1 1/2 PS		100	4.57 (116)	2.28 (57.9)				
BH□□-PB24-32		1 1/2 PB, Schedule Number: 80	1 1/2 PB, Schedule Number: 80			4.57 (116)	2.28 (57.9)			143	71.4
BH□□-FNS32-38	BH□□-FNS32-38-3	2 Female NPT	2 Female NPT	1.50 (38.1)	130	4.94 (125)	2.47 (62.7)	1.74 (44.2)	4.16 (106)	9.14 (232)	7.21 (183)
BH□□-FRT32-38	BH□□-FRT32-38-3	2 Female BSPT	2 Female BSPT								
BH□□-TS32-38	—	2" TS	2" TS								—
BH□□-PS32-38	—	2 PS	2 PS								
BH□□-PB32-38	—	2 PB, Schedule Number: 80	2 PB, Schedule Number: 80			5.09 (129)	2.55 (64.8)			156	77.9

1. FITOK means FITOK double ferrule tube fittings, TS means fractional tube socket weld, MTS means metric tube socket weld, TB means fractional tube butt weld, MTB means metric tube butt weld, PS means pipe socket weld, PB means pipe butt weld.
2. Sizes and types listed are standard. Other sizes and types are available upon request, refer to the ordering information.
3. Dimensions are shown with FITOK nuts finger-tightened. All dimensions are for reference only and are subject to change. For dimensions not shown above, please contact the authorized representative or FITOK Group.

FITOK

Part Number Description

BH6L - FNS8 - FRT8 - FL8 - P13G - OSHQ3L - SF2

Series

BH	

Body Material

SS	CF8M
S4	CF8
904L	904L SS

Connection 1 Type

FNS	Female NPT
NS	Male NPT
FRT	Female BSPT
RT	Male BSPT
FRP	Female BSPP (for RP)
BP	Male BSPP (for RG)
FMS	Female Metric Thread (for RG)
MS	Male Metric Thread (for RG)
MTS	Metric Tube Socket
TS	Fractional Tube Socket
MTB	Metric Tube Butt Weld
TB	Fractional Tube Butt Weld
PS	Pipe Socket Weld
PB	Pipe Butt Weld
FL	Fractional Tube Fitting
ML	Metric Tube Fitting
UFB	Nut + Gasket + Bulge Fractional Tube Nipple
UMB	Nut + Gasket + Metric Tube Bulge Nipple
UPB	Nut + Gasket + Bulge Pipe Nipple
FO	FO Fitting
FR	FR Fitting

Connection 1 Size

2	1/8"
4	1/4"
5	5/16"
6	3/8" or 6 mm
8	1/2" or 8 mm
10	10 mm
12	3/4" or 12 mm
14	14 mm or M14 x 1.5
16	1" or 16 mm
18	18 mm
20	1 1/4" or 20 mm or M20 x 1.5
22	22 mm or M22 x 1.5
24	1 1/2" or M24 x 1.5
25	25 mm
27	M27 x 2
28	28 mm
32	2" or 32 mm

Connection 2/3 Type / Connection 2/3 Size

	Same as Connection 1

Specify in the same way as the Connection 1 type and size

Seat Material

	PTFE
R	Reinforced PTFE
P	PEEK

Orifice Size

05	0.19" (4.8 mm)
07	0.28" (7.1 mm)
10	0.41" (10.4 mm)
13	0.52" (13.1 mm)
22	0.88" (22.2 mm)
29	1.13" (28.6 mm)
32	1.25" (31.8 mm)
38	1.50" (38.1 mm)

Packing Material

	Reinforced PTFE
G	Graphite

Handle/Actuator

	Yellow Handle Sleeve
C	Red Handle Sleeve
F	Green Handle Sleeve
J	Blue Handle Sleeve
CS	90° Normally Closed Spring Return Pneumatic Actuator
OS	90° Normally Open Spring Return Pneumatic Actuator
DA	90° Double Acting Pneumatic Actuator
LX	180° Left end normally open spring return pneumatic actuator
RX	180° Right end normally open spring return pneumatic actuator
DX	180° Double Acting Pneumatic Actuator
EA	90° Electric Actuator
EX	180° Electric Actuator

For Actuator

	NO
H	Mechanical Limit Switch
N	Inductive Limit Switch
Q	Electromagnetic Valve
HQ	Mechanical Limit Switch and Electromagnetic Valve
NQ	Inductive Limit Switch and Electromagnetic Valve

Flow Pattern

	Straight
3	3-way

Locking Device

	No
L	Yes

Special Application

	No
S	NACE MR0175

Cleaning and Packaging

	FC-01
F2	FC-02

1. *Standard thread pitch for metric threads are as follows:*
   M10 and below: 1 mm
   M12 to M24: 1.5 mm
   M27 and above: 2 mm
   Standard thread pitch should be ignored in the ordering number, others should be specified.
2. *FO means FITOK O-seal fittings.*
   FR means FITOK metal ring seal fittings.
3. *For information about pneumatic and electric actuator, please contact the authorized representative or FITOK Group.*
4. *For oxygen or virulent medium service, contact the authorized representative or FITOK Group.*
5. *Cleaning and Packaging:*
   FC-01: Standard cleaning and packaging for general industrial procedures.
   FC-02: Special cleaning and packaging for wetted system components to ensure compliance with product cleanliness requirements of ASTM G93 Level C.

Note: Most configurations are available if in but not everyone. doubt, please contact FITOK group or authorized agent.