Hex Bar Stock Ball Valves

BR Series

Features

- ◎ Working pressure up to: 1000 psig (69.0 bar)
- ◎ Working temperature: -20°F to 450°F (-28°C to 232°C)
- ◎ Compact and economical design
- ◎ Free floating ball design for seat wear compensation
- ◎ Bi-directional flow
- ◎ Low operating torque
- ◎ Any reasonable connections available
- ◎ Blowout proof stem
- ◎ Handle color options are available
- ◎ Leak-tight performance testing with nitrogen or compressed air for every valve at the maximum working pressure to meet the requirement of no visible leak

Pressure vs. Temperature

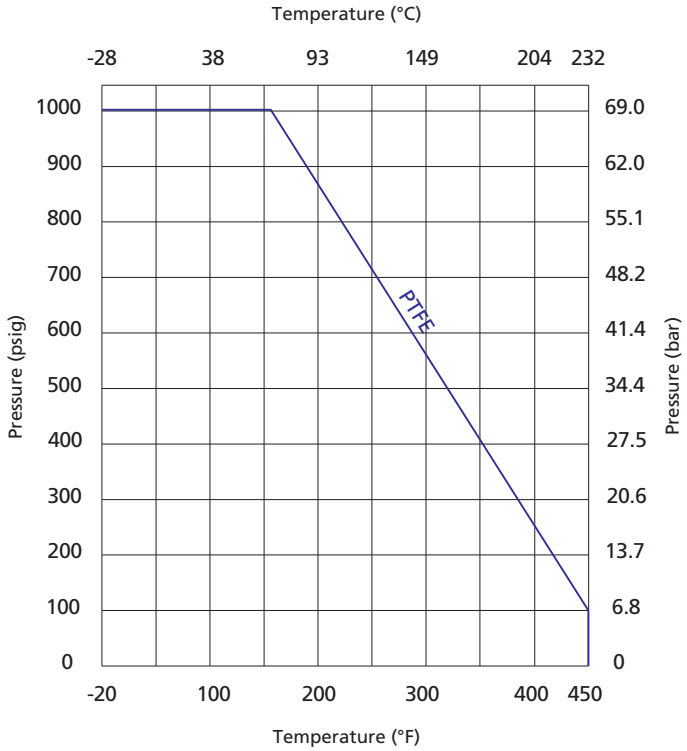

Standard Materials of Construction

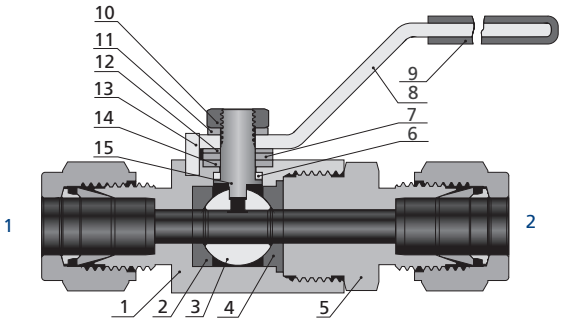

Item	Component	Valve Body Material			
		316 SS	304 SS	316L SS	Brass
1	*Body*	*316 SS/A276 CF8M/A351*	*304 SS/A276 CF8/A351*	*316L SS/A276 CF3M/A351*	*Brass/B16*
2	*Front Seat*	*PTFE/D1710*			
3	*Ball*	*316 SS/A276*			
4	*Back Seat*	*PTFE/D1710*			
5	*End Connection*	*316 SS/A276*	*304 SS/A276*	*316L SS/A276*	*Brass/B16*
6	*Bottom Packing*	*PTFE/D1710*			
7	Washer	316 SS/A276			
8	Handle	304 SS/A240 or Aluminium			
9	Sleeve	Vinyl			
10	Stem Nut	SS			
11	Gasket	SS			
12	Coned-disk Spring	S17700/A693			
13	Pin	SS			
14	*Top Packing*	*PTFE/D1710*			
15	*Stem*	*316 SS/A276*			

Note: Wetted components are listed in italic.
Other materials are available upon request.

Dimensions

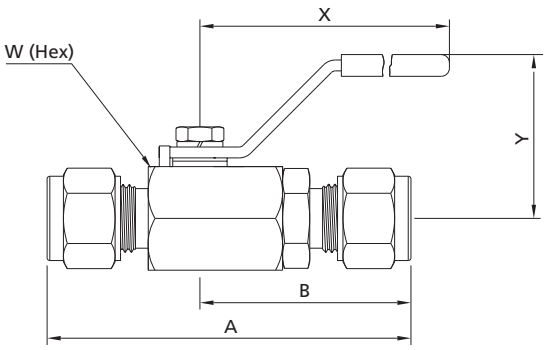

Basic Ordering Number	Connection Type and Size		Orifice in. (mm)	Cv	Dimension, in. (mm)				
	Connection 1	Connection 2			A	B	W	X	Y
BR□□-ML6-05	6 mm FITOK	6 mm FITOK	0.19 (4.8)	1.25	2.57 (65.2)	1.50 (38.1)	3/4 (19.05)	2.36 (60)	1.18 (30)
BR□□-ML8-05	8 mm FITOK	8 mm FITOK			2.63 (66.8)	1.53 (38.8)			
BR□□-FL4-05	1/4" FITOK	1/4" FITOK			2.57 (65.2)	1.50 (38.1)			
BR□□-FL5-05	5/16" FITOK	5/16" FITOK			2.63 (66.8)	1.53 (38.8)			
BR□□-FNS2-05	1/8 Female NPT	1/8 Female NPT			1.85 (47.0)	1.08 (27.4)			
BR□□-FRP2-05	1/8 Female BSPP	1/8 Female BSPP			2.00 (50.0)	1.14 (29.0)			
BR□□-FRP4-05	1/4 Female BSPP	1/4 Female BSPP			2.00 (50.0)	1.14 (29.0)			
BR□□-FNS4-05	1/4 Female NPT	1/4 Female NPT			1.85 (47.0)	1.08 (27.4)			
BR□□-ML10-07	10 mm FITOK	10 mm FITOK	0.28 (7.1)	2.50	2.87 (72.9)	1.68 (42.7)	7/8 (22.23)		
BR□□-FL6-07	3/8" FITOK	3/8" FITOK							
BR□□-FRP6-07	3/8 Female BSPP	3/8 Female BSPP			2.03 (51.6)	1.18 (30.0)			
BR□□-FNS6-07	3/8 Female NPT	3/8 Female NPT							
BR□□-ML12-10	12 mm FITOK	12 mm FITOK	0.35 (8.9)	9.25	3.15 (80.0)	1.83 (46.5)	27.0	3.15 (80)	1.54 (39)
BR□□-ML14-10	14 mm FITOK	14 mm FITOK			3.24 (82.2)	1.87 (47.5)			
BR□□-FL8-10	1/2" FITOK	1/2" FITOK			3.15 (80.0)	1.83 (46.5)			
BR□□-FL10-10	5/8" FITOK	5/8" FITOK			3.24 (82.2)	1.87 (47.5)			
BR□□-FRP8-10	1/2 Female BSPP	1/2 Female BSPP			2.08 (53.0)	1.12 (28.5)	15/16 (24.0)		
BR□□-FNS8-10	1/2 Female NPT	1/2 Female NPT			2.08 (53.0)	1.12 (28.5)			
BR□□-ML16-13	16 mm FITOK	16 mm FITOK	0.47 (12.0)	12.65	3.50 (88.9)	2.00 (50.8)	1 1/4 (31.75)	3.94 (100)	2.03 (51.7)
BR□□-ML18-13	18 mm FITOK	18 mm FITOK							
BR□□-FL12-13	3/4" FITOK	3/4" FITOK							
BR□□-FRP12-13	3/4 Female BSPP	3/4 Female BSPP			2.48 (63.0)	1.30 (33.0)			
BR□□-FNS12-13	3/4 Female NPT	3/4 Female NPT			2.39 (60.7)	1.20 (30.5)			
BR□□-ML22-16	22 mm FITOK	22 mm FITOK	0.63 (16.0)	17.35	3.96 (100.6)	2.24 (57.1)	1 1/2 (38.1)		2.15 (54.8)
BR□□-ML25-16	25 mm FITOK	25 mm FITOK			4.31 (109.5)	2.42 (61.5)			
BR□□-FL16-16	1" FITOK	1" FITOK							
BR□□-FRP16-16	1 Female BSPP	1 Female BSPP			3.25 (82.6)	1.63 (41.3)			
BR□□-FNS16-16	1 Female NPT	1 Female NPT			3.00 (76.5)	1.50 (38.1)			

1. FITOK means FITOK double ferrule tube fittings.
2. Sizes and types listed are standard. Other sizes and types are available upon request.
3. Dimensions are shown with FITOK nuts finger-tightened. All dimensions are for reference only and are subject to change. For dimensions not shown above, please contact the authorized representative or FITOK Group.

FITOK

Part Number Description

BRSS - ML8 - FL4 - 05 - UL – SF2

Series	Body Material	Connection 1 Type	Connection 1 Size	Connection 2 Type / Connection 2 Size	Orifice	Handle	Locking Device	Special Application	Cleaning and Packaging
BR	SS 316 SS 6L 316L SS S4 304 SS B Brass 904L 904L SS	FNS Female NPT NS Male NPT FRT Female BSPT RT Male BSPT FRP Female BSPP (for RP) BP Male BSPP (for RG) FL Fractional Tube Fitting ML Metric Tube Fitting UFB British Tube Pipe union joint butt welding UMB Metric Tube Pipe union joint butt welding UPB Then live Pipe pipe butt welding	2 1/8" 4 1/4" 5 5/16" 6 3/8" or 6 mm 8 1/2" or 8 mm 10 10 mm 12 3/4" or 12 mm 14 14 mm or M14 x 1.5 16 1" or 16 mm 18 18 mm 20 1 1/4" or 20 mm or M20 x 1.5 22 22 mm or M22 x 1.5 25 25 mm	Same as connection 1 Specify in the same way as connection 1 type and size	05 0.18" (4.8 mm) 07 0.28" (7.1 mm) 10 0.35" (8.9 mm) 13 0.47" (12.0 mm) 16 0.63" (16.0 mm)	SS with Yellow Vinyl Cover C SS with Red Vinyl Cover J SS with Blue Vinyl Cover U Black Aluminium NY Black Nylon	NO L Yes	NO S NACE MR0175	FC-01 F2 FC-02

Note: Most configurations are available but not everyone.
If in doubt, please contact FITOK group or authorized agent.

1.Standard thread pitch for metric threads are as follows:
M10 and below: 1 mm
M12 to M24: 1.5 mm
M27 and above: 2 mm
Standard thread pitch should be ignored in the ordering number, others should be specified.
2. For oxygen or virulent medium service, contact the authorized representative or FITOK Group.
3. Cleaning and Packaging:
FC-01: Standard cleaning and packaging for general industrial procedures.
FC-02: Special cleaning and packaging for wetted system components to ensure compliance with product cleaning requirement of ASTM G93 Level C.